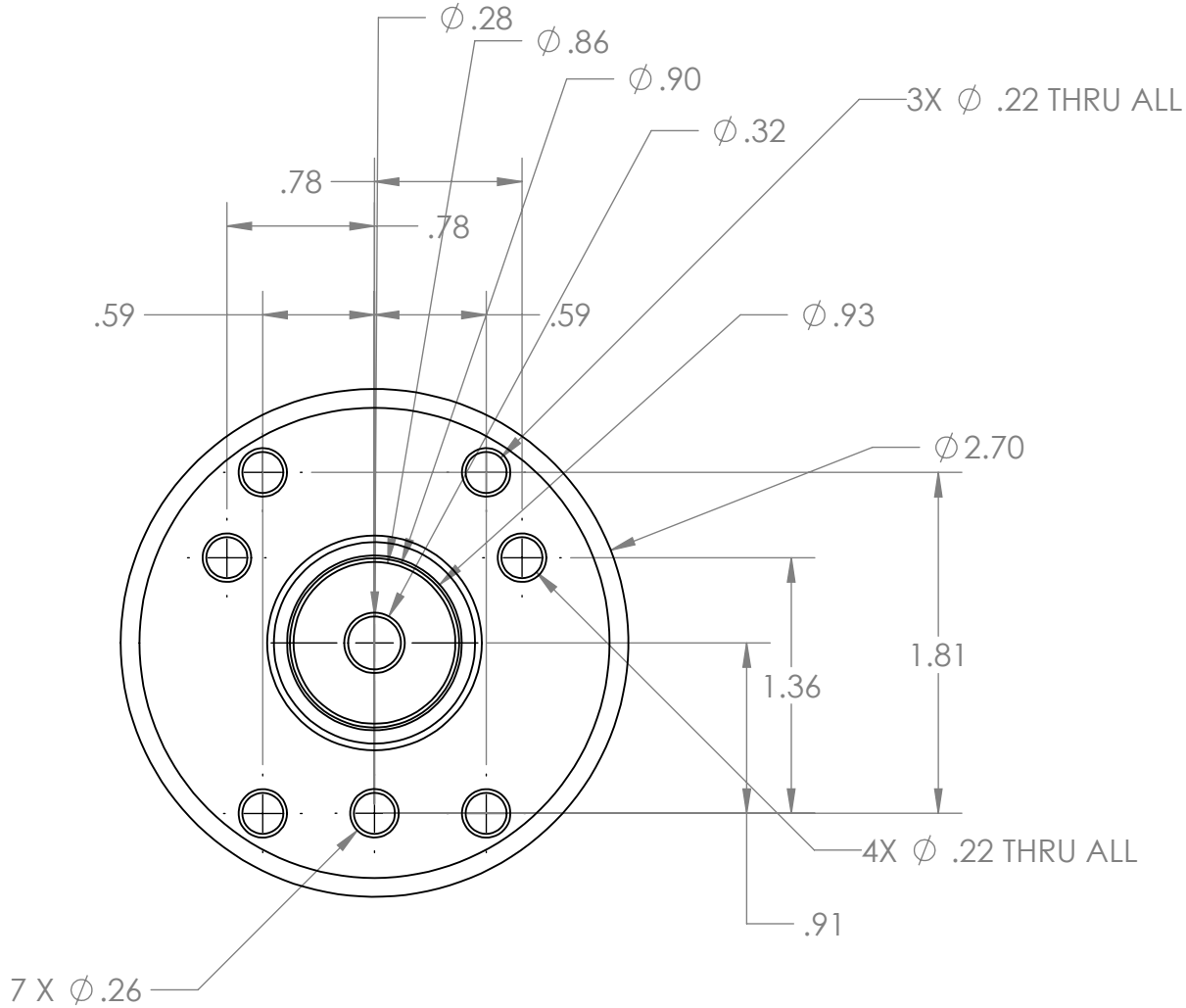
∅.28
∅.86
∅.90
∅.32
3X ∅ .22 THRU ALL
.78
.78
.59
.59
∅.93
∅2.70
1.81
1.36
4X ∅ .22 THRU ALL
.91
7 X ∅.26